REVISION				
ZONE	REV	DESCRIPTION	DATE	APPROVED
	4	INITIAL RELEASE	4/4/2019	1

GENERAL NOTES: UNLESS OTHERWISE SPECIFIED

1. PARTS TO BE CLEAN AND FREE OF BURRS AND SHARP EDGES.
2. PARTS MUST MEET THE FOLLOWING ADDITIONAL REQUIREMENTS AS APPLICABLE:
   a. THIS IS A COMPUTER GENERATED DRAWING, ALL REVISION CHANGES MUST BE COMPLETED THROUGH THE COMPUTER DATA BASE.
   b. DIMENSIONS APPLY AFTER PLATING.
   c. WELDING TO BE IN ACCORDANCE WITH APPROPRIATE AMERICAN WELDING SOCIETY STANDARDS.
3. PARTS MUST BE IDENTIFIED WITH PART NUMBER AND LATEST REVISION LETTER BY ETCHING OR LABEL.
4. DIMENSIONING FORMAT IS IN INCHES.
5. DASH NUMBERS MAY BE USED BY MANUFACTURING FOR INTERNAL PROCESSES.
6. AREAS INDICATED BY X DENOTE CHANGE OCCURRED IN THIS AREA AT "X" REVISION.
7. INSIDE RADII TO BE .09 MAX.
8. FILL CORNERS AND EDGES WITH WELD USING PARENT METAL FILLERS. GRIND SPECIFIED CONTOUR FLUSH WITH ADJACENT SURFACES.
9. INSTALL PER MANUFACTURER'S RECOMMENDATIONS.
10. THE APPEARANCE OF THE EXTERIOR SURFACES IS OF PRIME IMPORTANCE. SCRATCHES, MARS, BLEMISHES, SPOT WELDS, ETC. SHALL BE REMOVED THE NO.4 POLISH SHALL BE RESTORED SUCH THAT THE RESTORATION IS UNDETECTABLE TO THE NAKED EYE WHEN VIEWED FROM 60 INCHES.
11. INDICATED EDGES SHALL BE SMOTH AND ROUNDED PER UL 1439.
12. CHAMFERED CORNERS MAY HAVE A RADIUS WITH THE SAME DIMENSION.

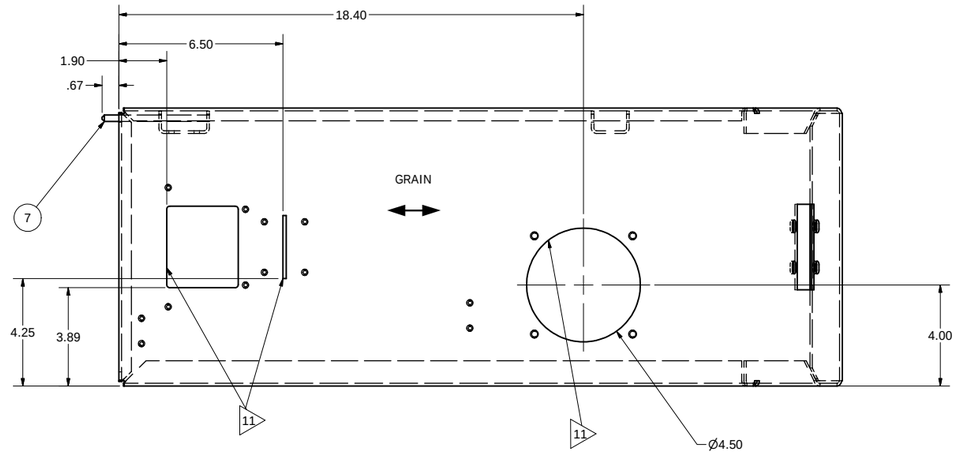

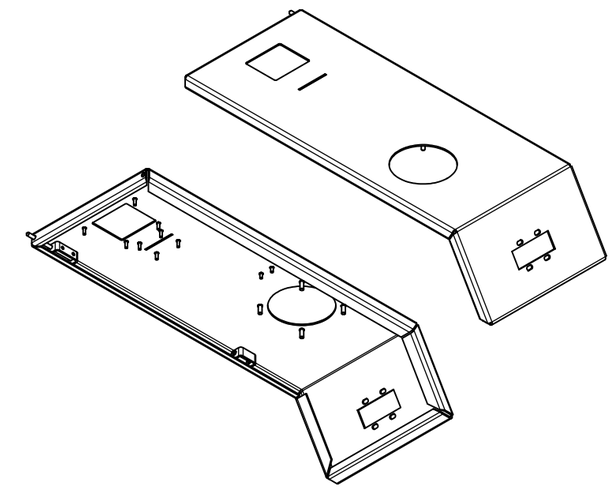

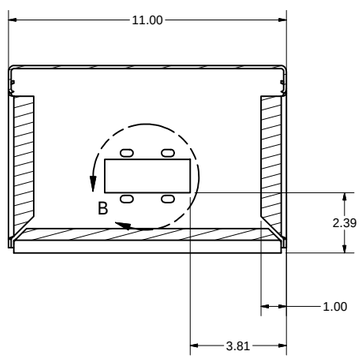

SECTION A-A
SCALE 1 : 3

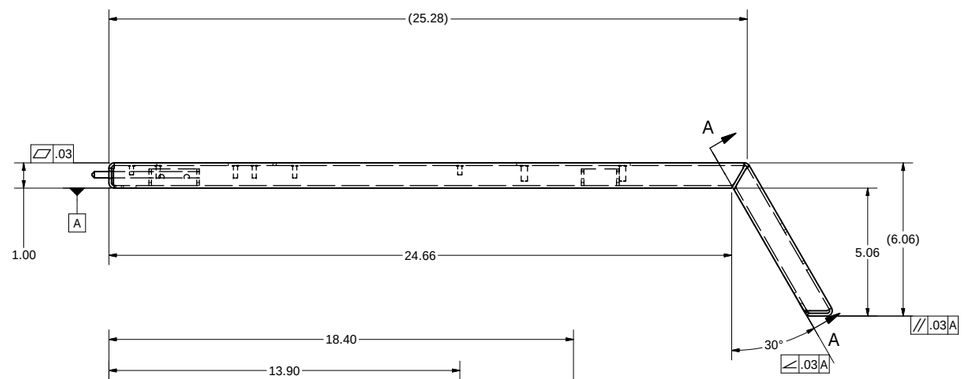

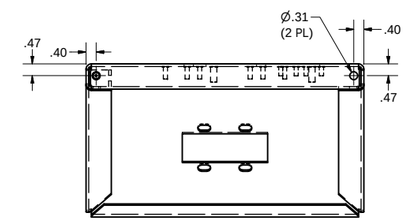

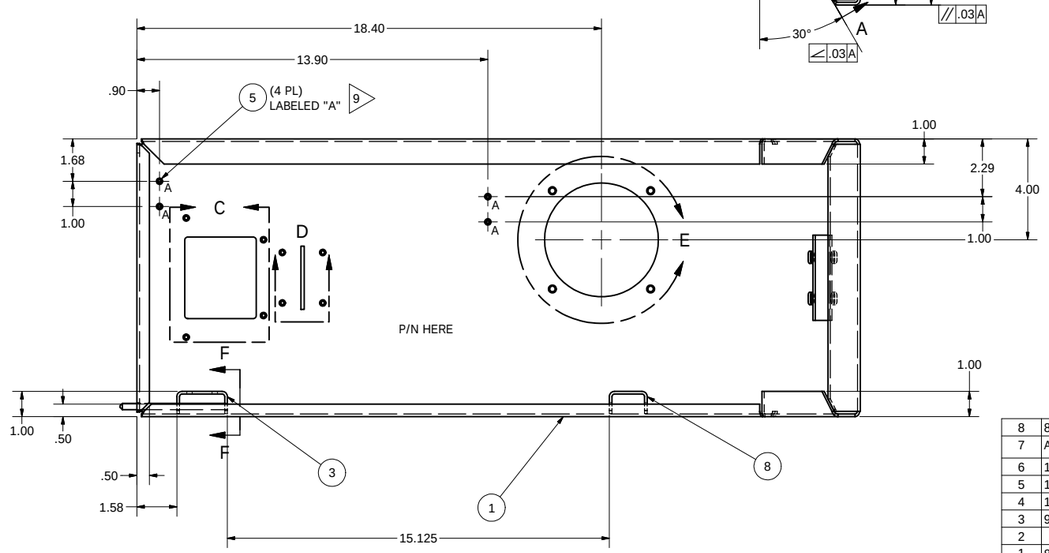

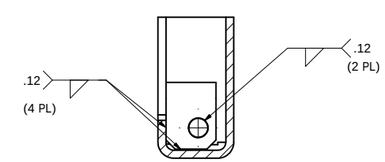

SECTION F-F
SCALE 1 : 1

ITEM	PART NUMBER	REVISION NUMBER	DESCRIPTION	VENDOR	QTY	U/M
8	802820-2736	1	HINGE (304 CRES, SHT, 0.105)		1	
7	A8-35	1	SHAFT, PRECISION, .250 DIA		1	EA
6	101-208-375		STUD, WELD, 1/4-20 X .625 LG	NELSON	4	EA
5	101-208-331		STUD, WELD, 8-32 X .375 LG	NELSON	4	EA
4	101-208-332		STUD, WELD, 8-32 X .50 LG	NELSON	8	EA
3	9375-2372.A	3	HINGE, BLOCK GATE-BART		1	EA
2			304 CRES, SHT, NO.4 F1S .105			
1	80280-1600	2	PANEL, TOP COVER (RIGHT), DUPLEX GATE		1	EA

DO NOT MANUFACTURE TO THIS DRAWING UNLESS:

1. IT IS SIGNED AND DATED IN RED INK BELOW.
2. THE REVISION MATCHES THE PURCHASE ORDER. OR SHOP ORDER. TO VERIFY CONTACT BART PURCHASING AT 1-510-464-6000

AUTHORIZED BART SIGNATURE — DATE

THE INFORMATION DISCLOSED HEREIN IS PROPRIETARY INFORMATION OWNED BY THE SAN FRANCISCO BAY AREA RAPID TRANSIT DISTRICT (THE "DISTRICT").

NEXT ASSY:

DO NOT SCALE DRAWING

TOLERANCES: UNLESS OTHERWISE SPECIFIED

METRIC HOLE TOLERANCES		INCH HOLE TOLERANCES	
HOLE DIA	TOLERANCES	HOLE DIA	TOLERANCES
.34mm THRU 3.18mm	+.10mm -.03mm	.0135 THRU .125	+.004 -.001
3.20mm THRU 6.35mm	+.13mm -.03mm	.126 THRU .250	+.005 -.001
6.37mm THRU 12.70mm	+.15mm -.03mm	.251 THRU .500	+.006 -.001
12.72mm THRU 19.05mm	+.20mm -.03mm	.501 THRU .750	+.008 -.001
19.07mm THRU 25.40mm	+.25mm -.03mm	.751 THRU 1.000	+.010 -.001

LINEAR		
DECIMAL PLACES	INCHES	MILLIMETERS
X.	--	2.0mm
.X	±.1	0.7mm
.XX	±.03	0.2mm
.XXX	±.010	--
ANGULAR ± 2°		

CAE FILE DATE	APPROVAL
AUTHOR: -	DATA ADMIN
DESIGN DATE:	DESIGNER
FILE NAME:	ENGINEER
WORKING DIRECTORY:	DESIGN APPROVAL
STOCK NUMBER:	INITIAL RELEASE

BART
BAY AREA RAPID TRANSIT DISTRICT

TITLE: PANEL, TOP COVER (RIGHT), DUPLEX GATE

SIZE	COST CENTER	DWG NO.	REV
D	802820	80280-1600	4

SCALE | BART PROJECT NO. 47CJ014 | SHEET 1 OF 2